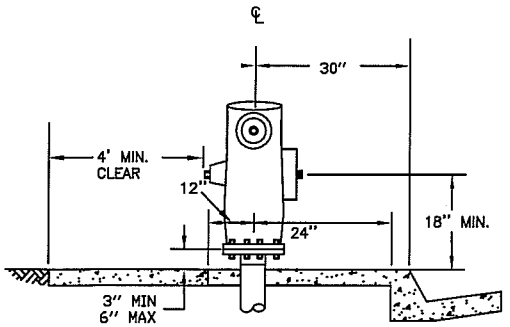

DETAIL A
NO SCALE
(SEE NOTE 3)

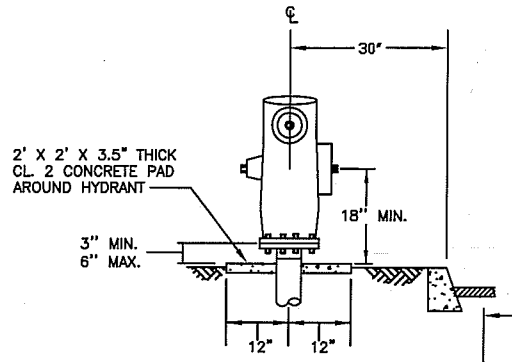

DETAIL B
NO SCALE
(SEE NOTE 4)

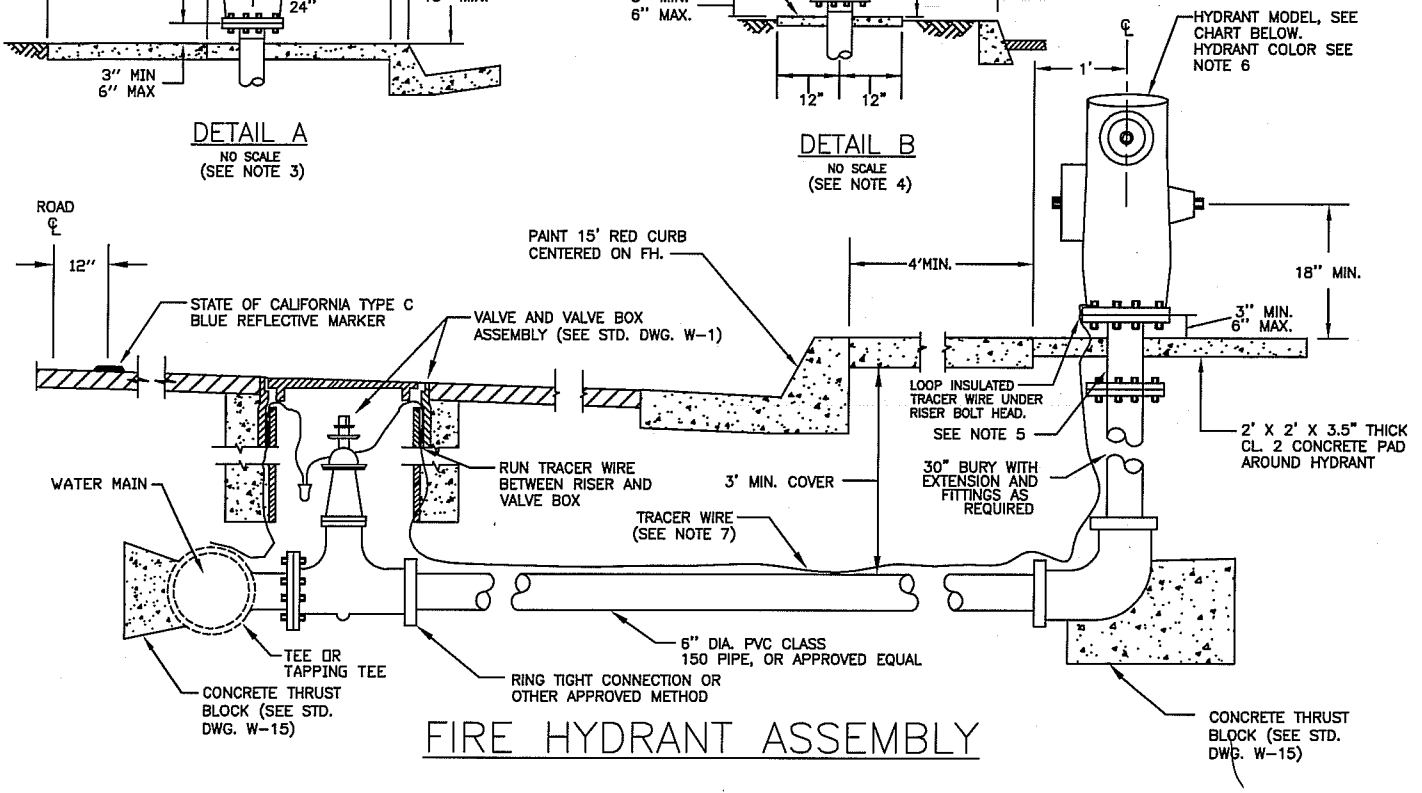

FIRE HYDRANT ASSEMBLY

NOTES

1. THE FIRE HYDRANT ASSEMBLY SHALL INCLUDE HYDRANT, 12" BREAK OFF RISER, EXTENSION, BURY, THRUST BLOCKS, GATE VALVE, VALVE BOX ASSEMBLY, PIPING, TEE, TRACER WIRE, AND ALL NECESSARY FITTINGS.

2. UNLESS OTHERWISE APPROVED BY THE CITY ENGINEER, INSTALLATION OF HYDRANTS ON EXISTING WATER MAINS WILL REQUIRE HOT TAPPING METHOD OF INSTALLATION. THE APPROPRIATE TAPPING TEE AND VALVE SHALL BE SUPPLIED AND INSTALLED BY THE CONTRACTOR.

3. THE FIRE HYDRANT SHALL BE INSTALLED AS SHOWN IN DETAIL "A" FOR FULL WIDTH SIDEWALK AREAS, OR AS APPROVED BY THE CITY ENGINEER. 4.5" OUTLET TO FACE STREET.

4. SEE DETAIL "B" FOR INSTALLATION IN PLANTER AREAS, MUST BE APPROVED BY CITY ENGINEER. 4.5" OUTLET TO FACE ACCESS WAY.

5. RESIDENTIAL FIRE HYDRANTS SHALL BE INSTALLED WITH A 12" BREAK OFF RISER AND ATTACHED TO THE RISER WITH DOWNWARD FACING HOLLOW BOLTS IN ACCORDANCE WITH THE MANUFACTURER'S SPECIFICATIONS.

6. HYDRANT SHALL BE PAINTED SAFETY YELLOW WITH SAFETY BLUE CAPS.

7. TRACER WIRE SHALL BE #10 STRANDED COPPER, WHITE INSULATION. PROVIDE MIN. 12" LEAD INSIDE OF VALVE BOX.

CITY APPROVED RESIDENTIAL FIRE HYDRANTS		
REQUIRED OUTLETS	JAMES JONES CO. MODEL J-4040A	*
1 EA. 2.5" OUTLET 1 EA. 4.5" OUTLET	CLOW CORPORATION MODEL 950	*
	AMERICAN AVK MODEL 2470	*

* MIN. HYDRANT FLOW COEFFICIENT OF 0.9 ON ALL HYDRANT MODELS.

CITY OF CLOVIS

RESIDENTIAL FIRE HYDRANT

DWG NO. W-2

REF. STD. SPECIFICATIONS SECTION 66

APPROVED BY:

CITY ENGINEER

DATE: 1/17/13

NO.	REVISED	BY
	07-28-09	BGJ
	11-23-09	BGJ
	01-09-13	PAA

APPROVALS

CM

DRU

PUD

FIRE G.S

SCALE: NTS

DRAWN BY: JA

SHEET 1 OF 1