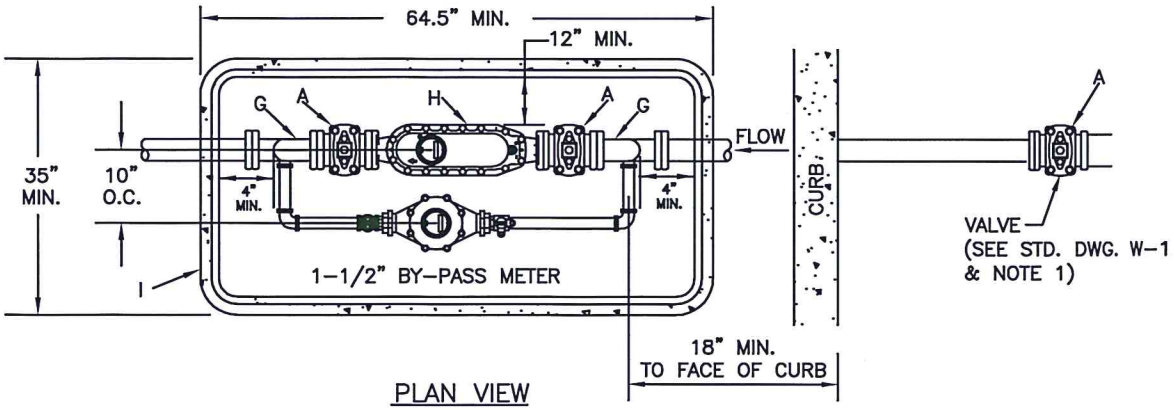

PLAN VIEW

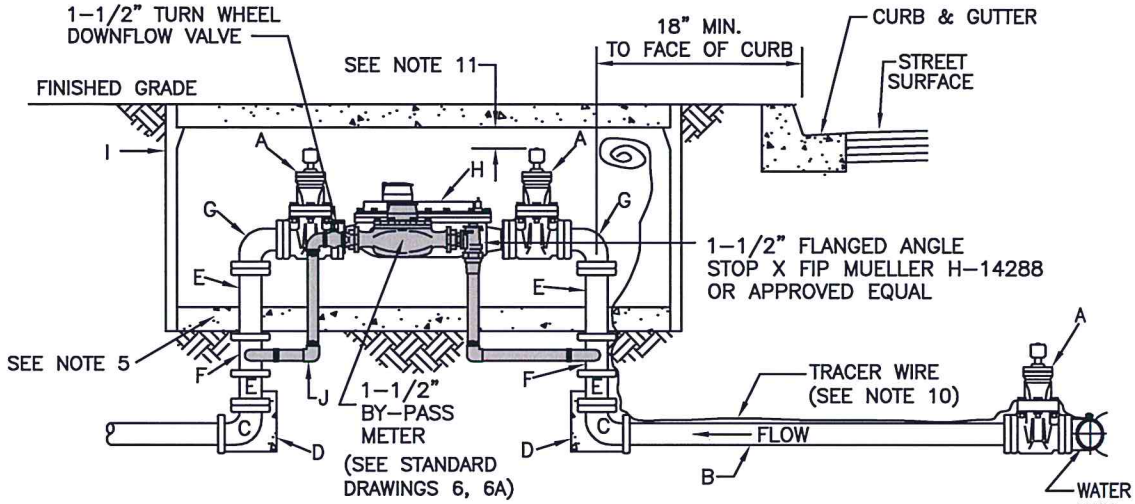

ELEVATION

LEGEND:

A. 4" FLANGED GATE VALVE (SEE NOTE 1).
B. 4" PVC C900 OR DUCTILE IRON PIPE CLASS 150 OR HIGHER.
C. 4" DUCTILE IRON 90° FLANGE x MJ ELBOWS.
D. THRUST BLOCK, SEE STD. DWG. W-15.
E. 4" DUCTILE IRON FLANGED SPOOL; LENGTH AS NEEDED.
F. 4"X4" DUCTILE IRON FLANGED TEE W/4"X 2" TAPPED BLIND FLANGE W/REDUCER BUSHING.
G. 4" DUCTILE IRON FLANGED ELBOW.
H. FLANGED 4" METER W/STRAINER (SEE NOTE 7).
I. CHRISTY B52 BOX & B52M3 LID, OR LARGER SIZED TO FIT.
J. GALVANIZED PIPE.

NOTES:

1. VALVES TO BE MUELLER A-2360 OR EQUAL WITH 2" SQUARE NUTS, CCW TO OPEN.
2. 1-1/2" BY-PASS TO BE LOCATED INSIDE METER BOX. (REFER TO STD. DWG. W-6 & W-6A).
3. 1-1/2" BY-PASS INLET VALVE MUST BE A FLANGED ANGLE STOP PLUG OR BALL VALVE.
4. 1-1/2" BY-PASS DOWNFLOW VALVE MUST BE A BRASS RED & WHITE TURN WHEEL VALVE.
5. 4" SEAL/BENCH WITH CONCRETE INSIDE OF VAULTS.
6. METER BOX IN SIDEWALK OR PLACE 3-1/2" CL.2 CONCRETE SLAB, 1' ON ALL SIDES OF BOX.
7. 20-1/4" GALVANIZED SPACER SHALL BE INSTALLED IN PLACE OF THE METER/ STRAINER (H).
8. DOUBLE WRAP ALL GALVANIZED PIPE THAT IS UNDERGROUND WITH 10 MIL TAPE.
9. CENTER METER ASSEMBLY IN BOX.
10. TRACER WIRE SHALL BE #10 STRANDED COPPER, WHITE INSULATION.
11. TOP OF OPERATIVE SQUARE NUT TO BE 4" MIN. TO 12" MAX. BELOW BOTTOM OF LID.

CITY OF CLOVIS

4" COMPOUND WATER SERVICE

DWG NO. W-8

REF. STD. SPECIFICATIONS SECTION 66

APPROVED BY:

CITY ENGINEER

DATE: 11/22/16

NO.	REVISED	BY	APPROVALS
	11-24-09	BGJ	CM
	01-07-16	BGJ	DRU
			PUD

SCALE: NTS

DRAWN BY: JA

SHEET 1 OF 1